PRODUCT SHEET

Description:
Stop Bracket Right When Seated, YZP, W/2 Holes ø6,1mm, 6 MY

Item number:
04.04.920-0

Units	Box	Carton	HS Code	Barcode
Pcs.	1	250	8302420090	5704866002691

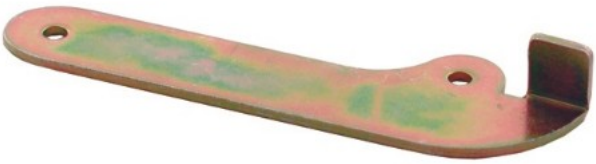

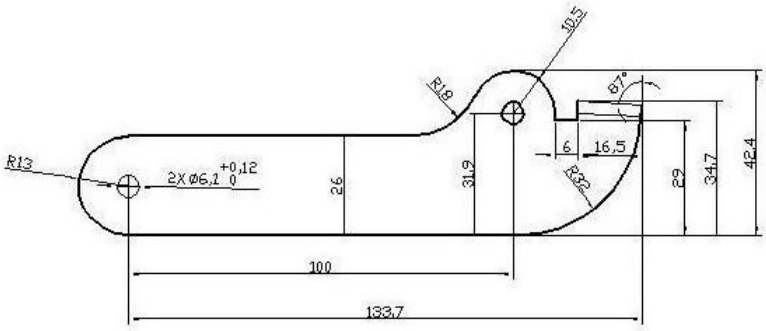

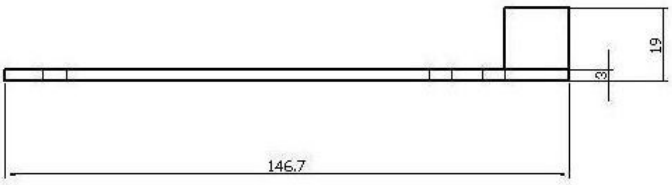

SISO A/S
Mileparken 11
DK-2740 Skovlunde
Denmark
VAT: DK 24786013

Phone +45 45 830 900

www.siso.dk
siso@siso.dk

Danske Bank
Nytorv Branch
Copenhagen
SWIFT: DABADKKK

Account no.
4180 3112 112936
IBAN Account
DK7230003112112936